Iovem

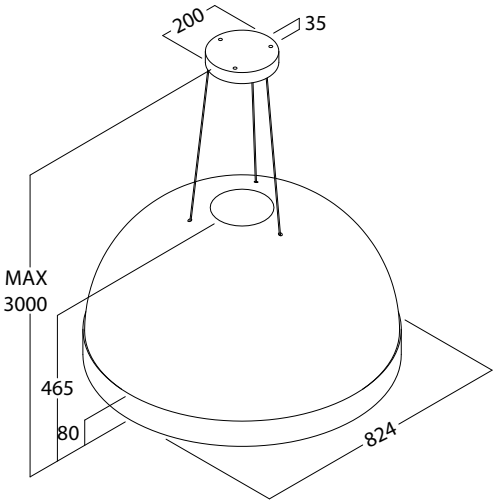

airworks