OK!

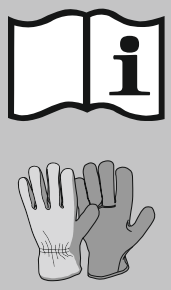

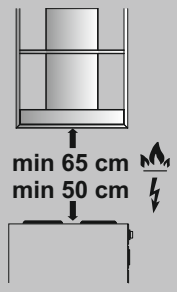
min 65 cm
min 50 cm

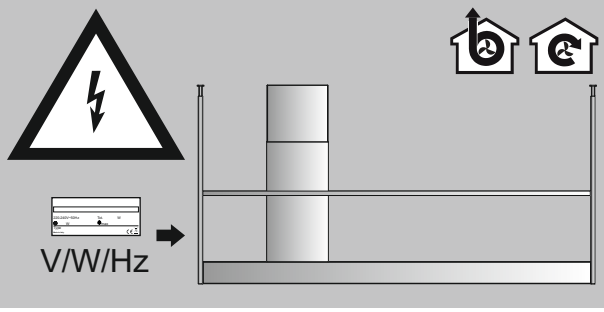
V/W/Hz

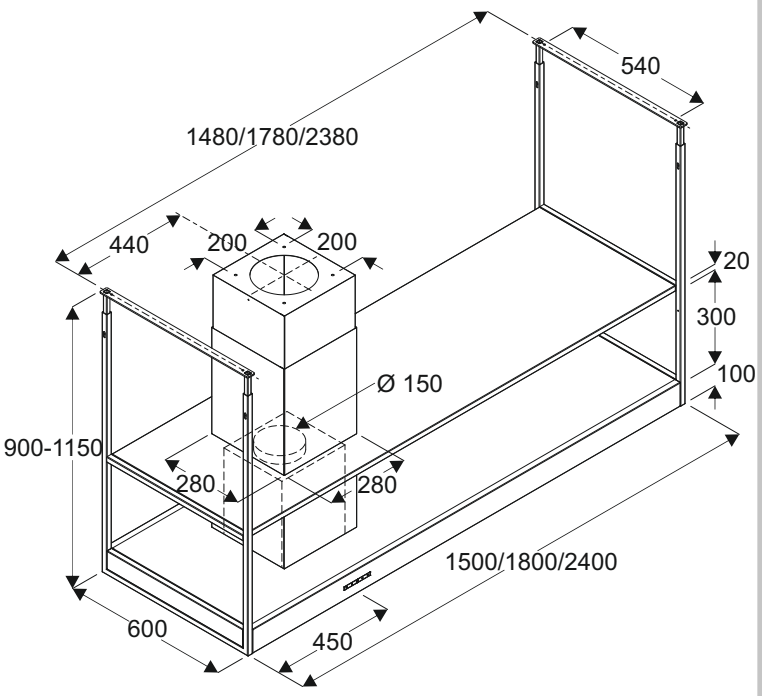
540
1480/1780/2380
440
200
200
20
300
100
Ø 150
900-1150
280
280
1500/1800/2400
600
450

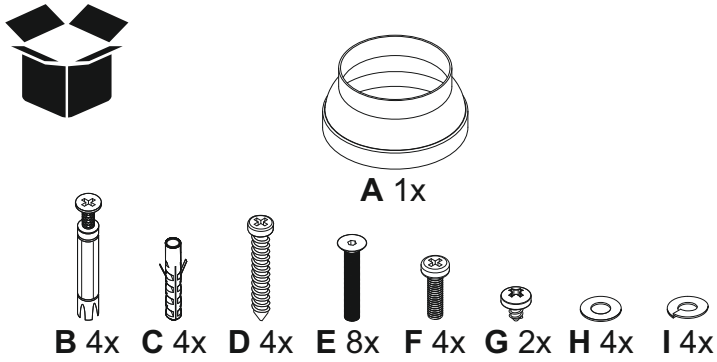
A 1x
B 4x
C 4x
D 4x
E 8x
F 4x
G 2x
H 4x
I 4x

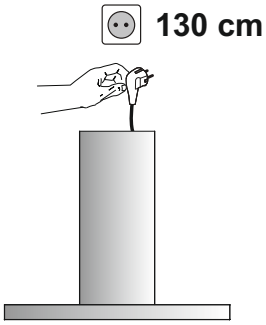
130 cm

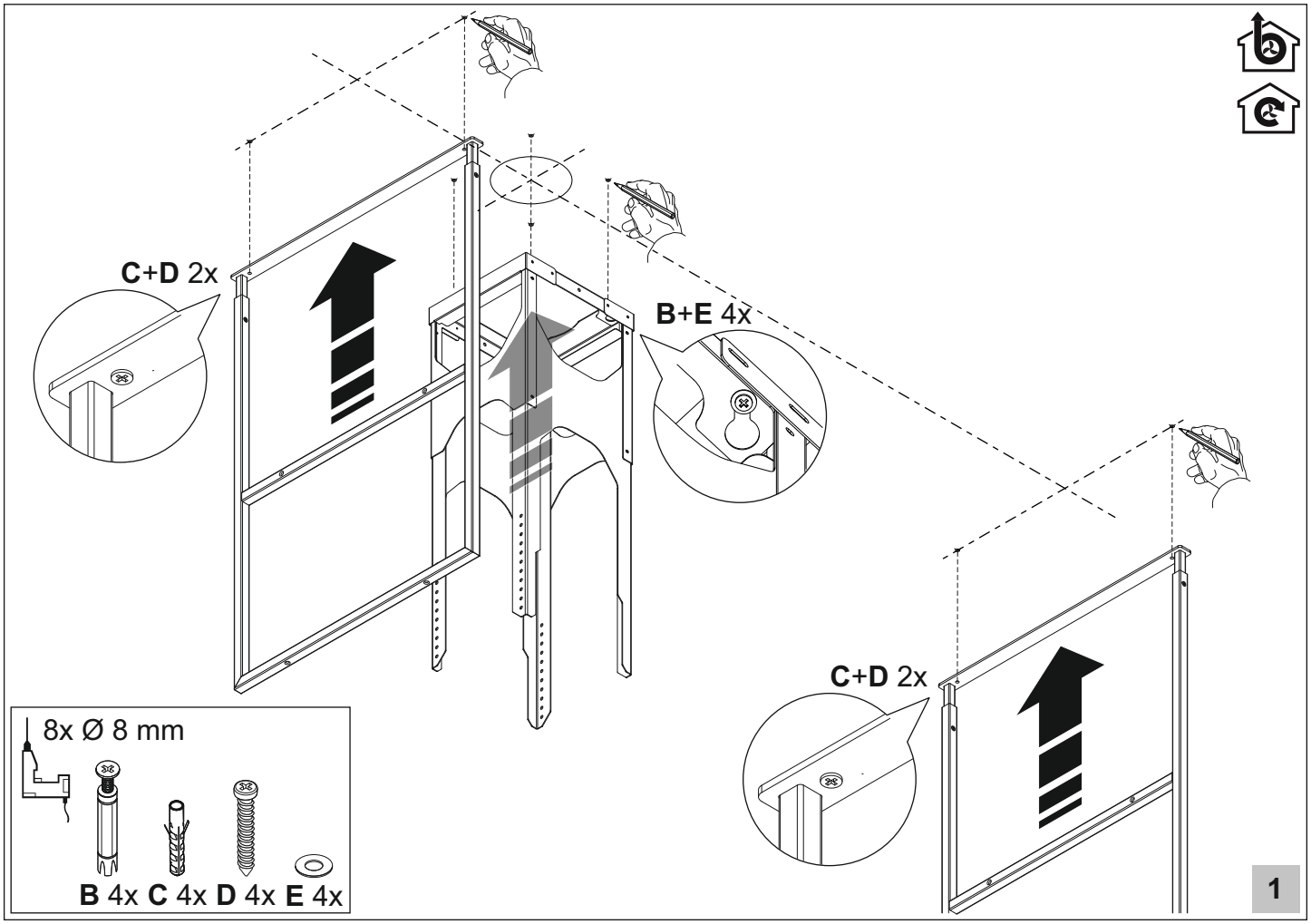
C+D 2x
B+E 4x
C+D 2x
8x Ø 8 mm
B 4x C 4x D 4x E 4x
1

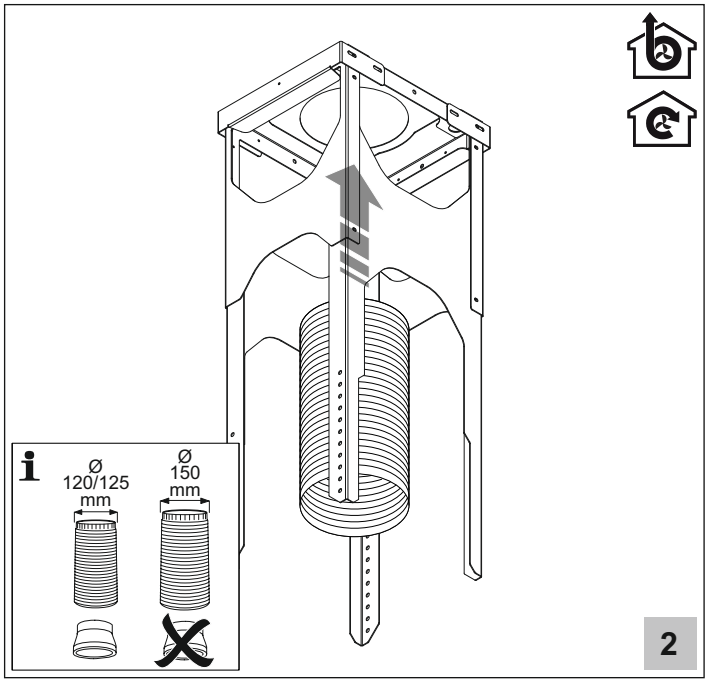
i
Ø
120/125
mm
Ø
150
mm
2

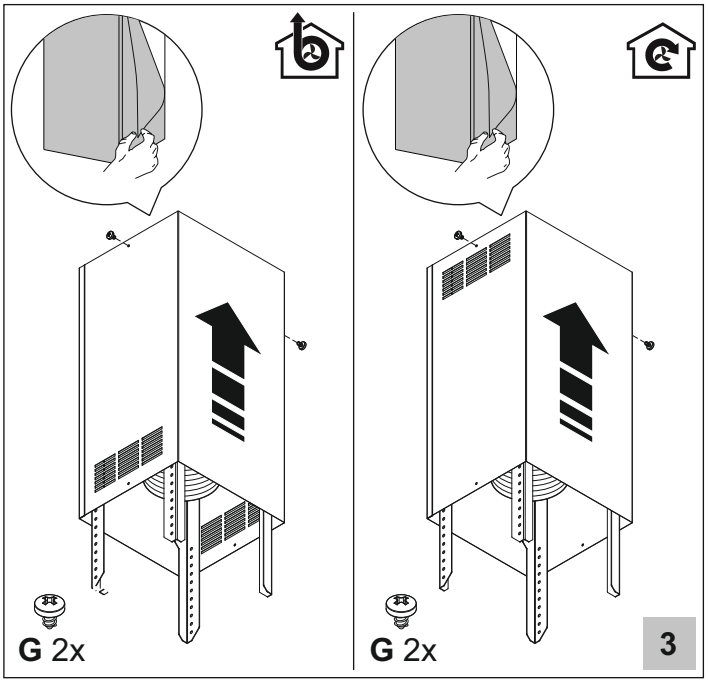
G 2x
G 2x
3

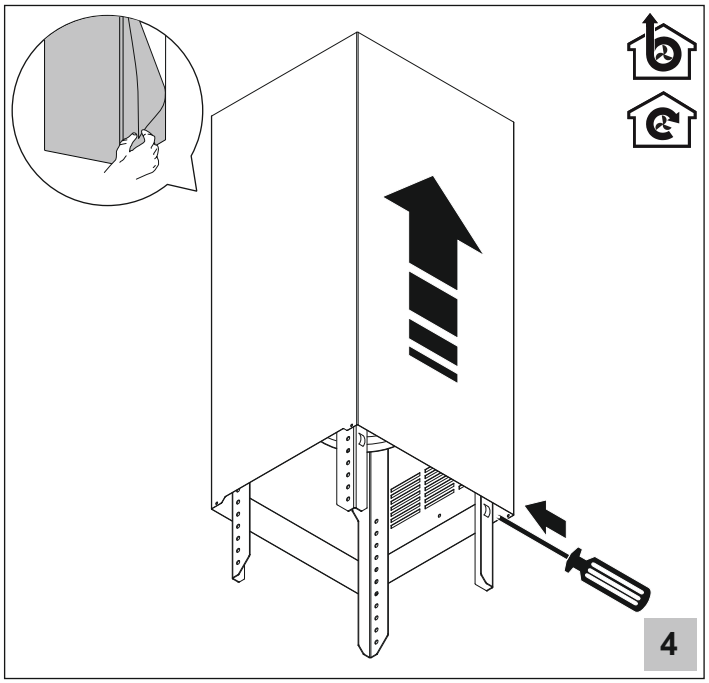
4

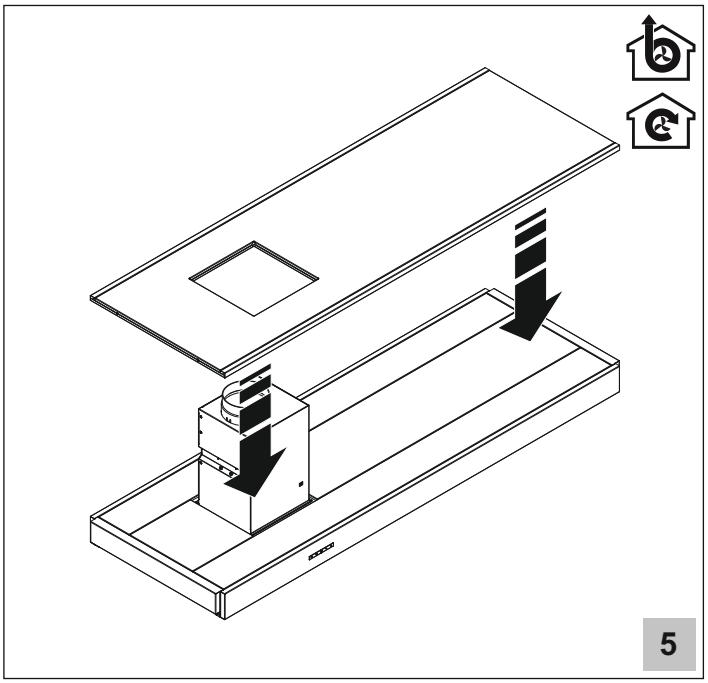
5

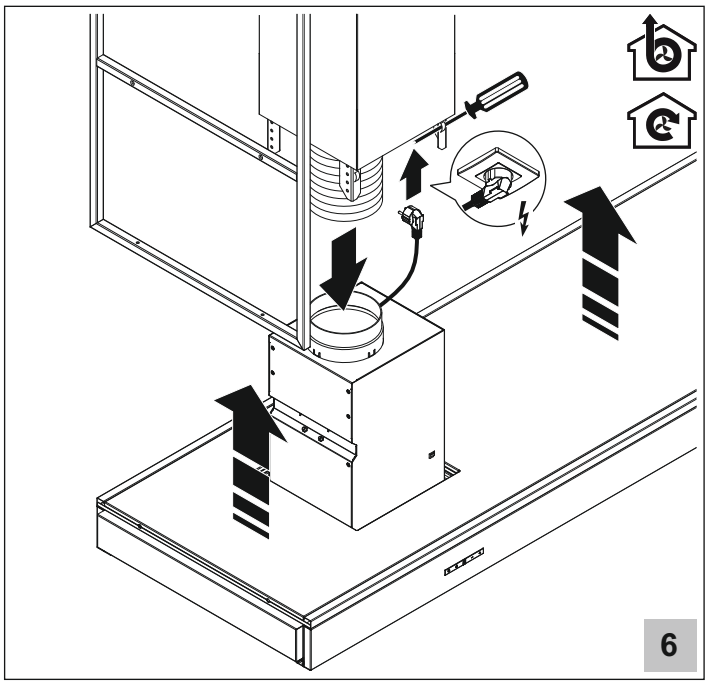
6

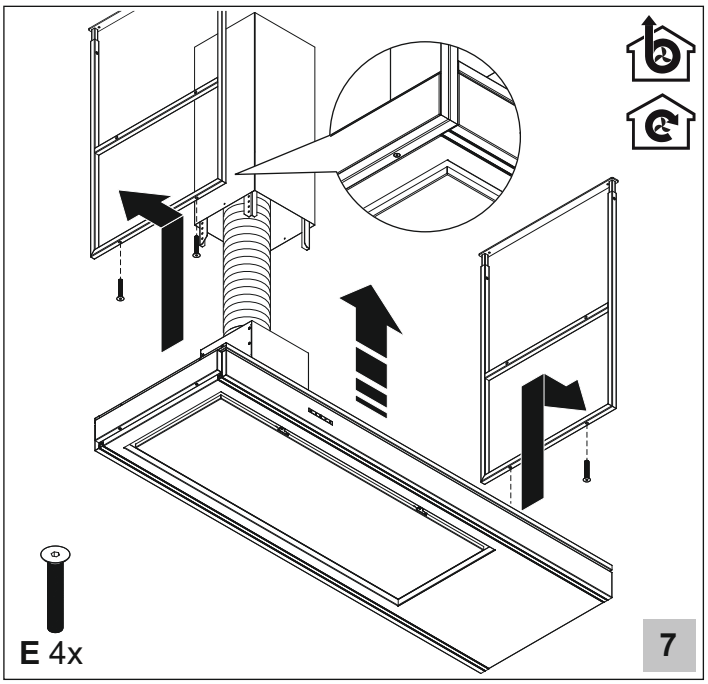
E 4x
7

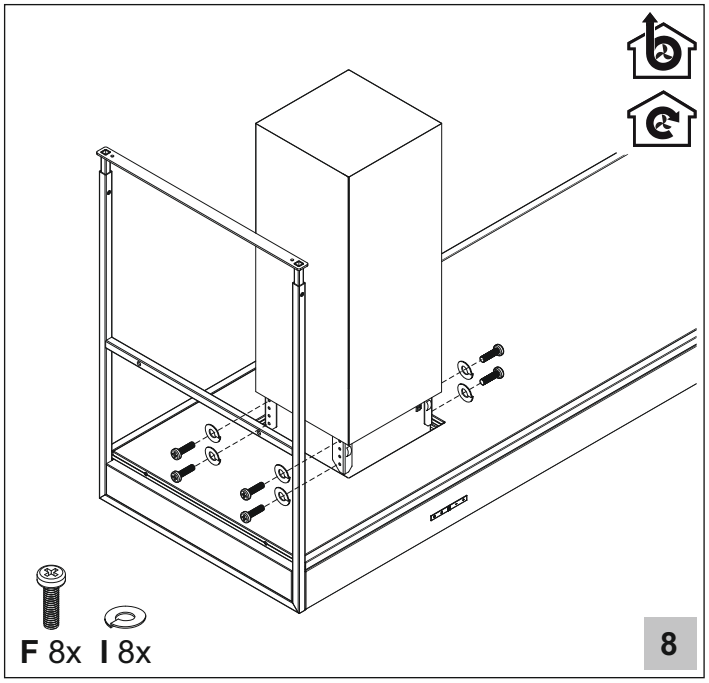
F 8x I 8x
8

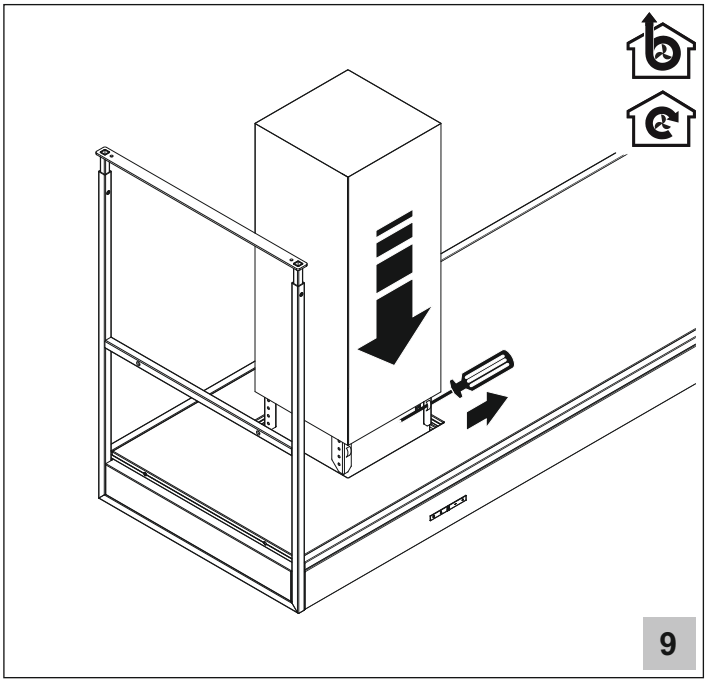
9

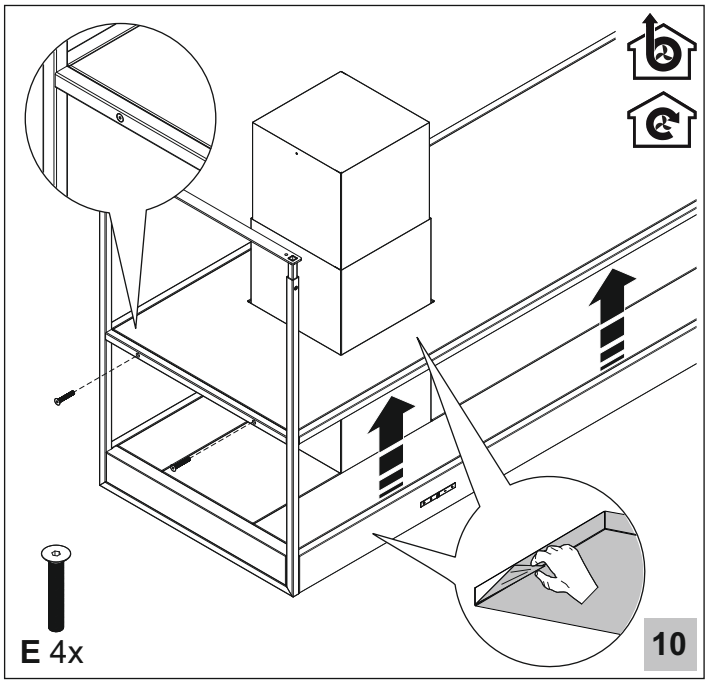
E 4x
10

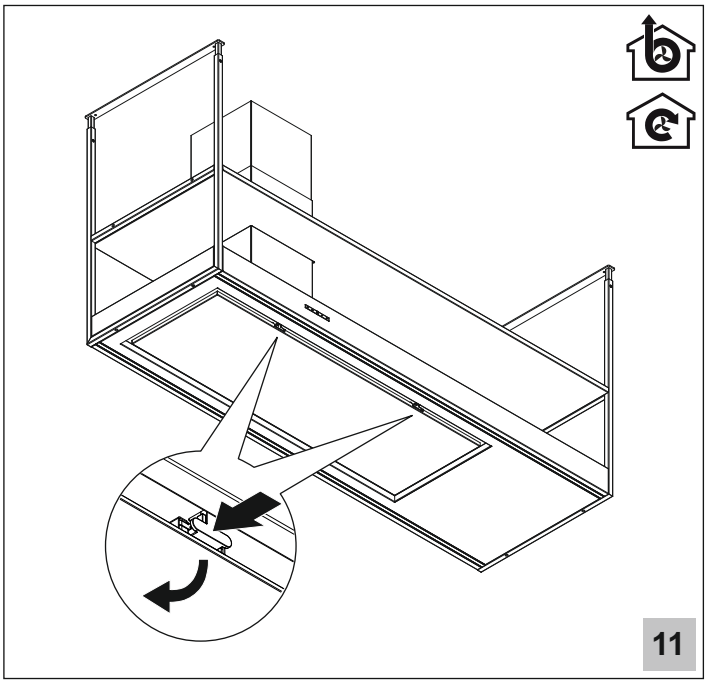
11

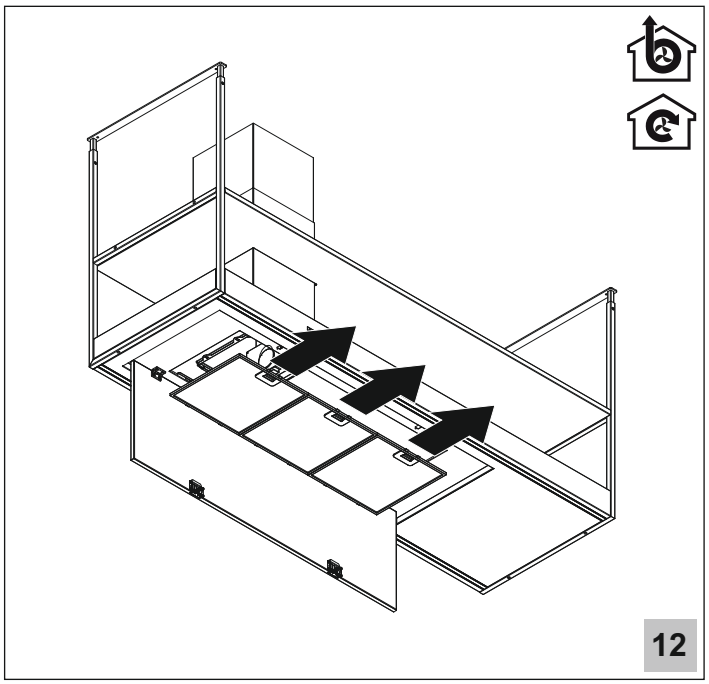
12