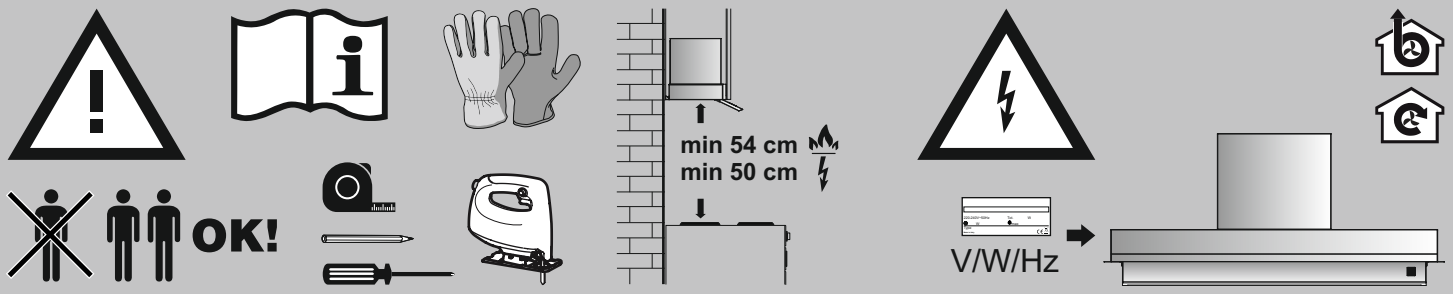
OK!
min 54 cm
min 50 cm
V/W/Hz

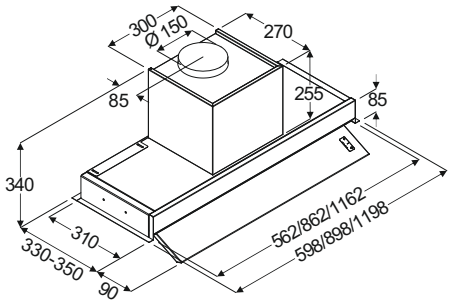
300
Ø150
270
85
255
85
340
310
330-350
90
562/862/1162
598/898/1198

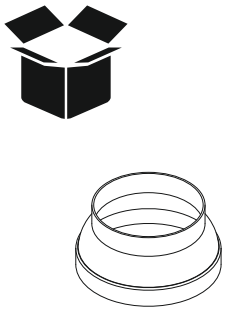

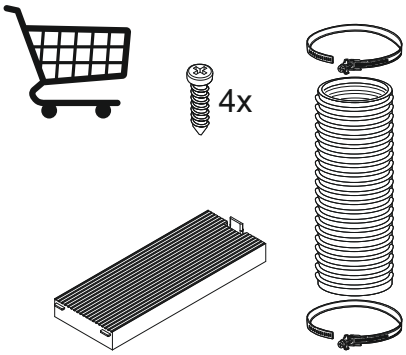
4x

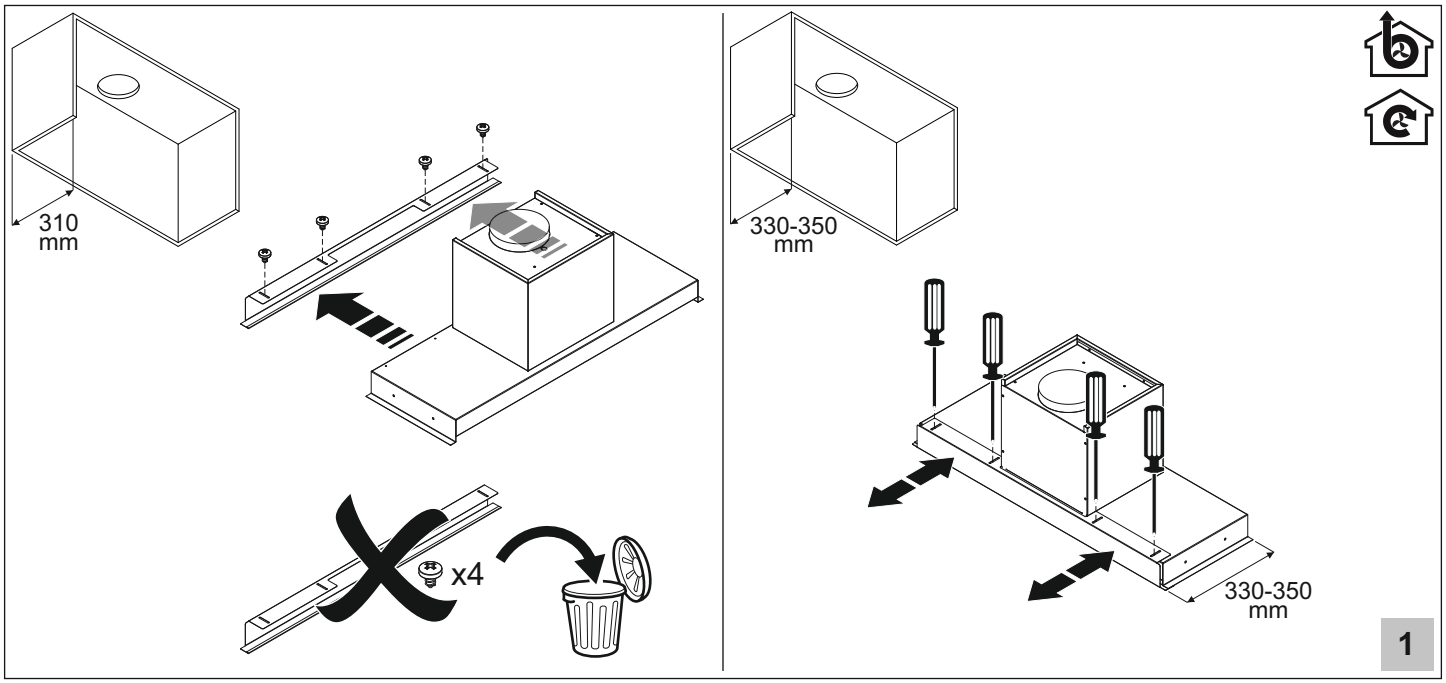
310
mm
x4
330-350
mm
330-350
mm
1

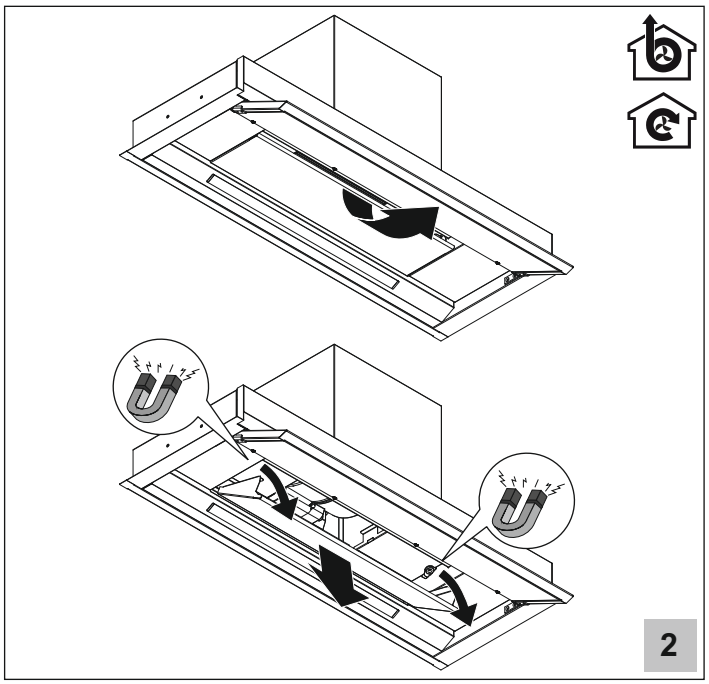
2

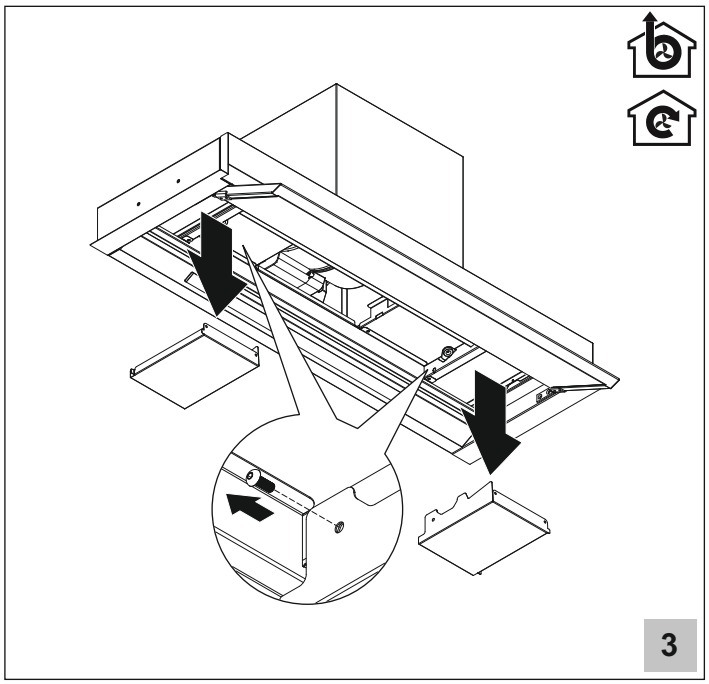
3

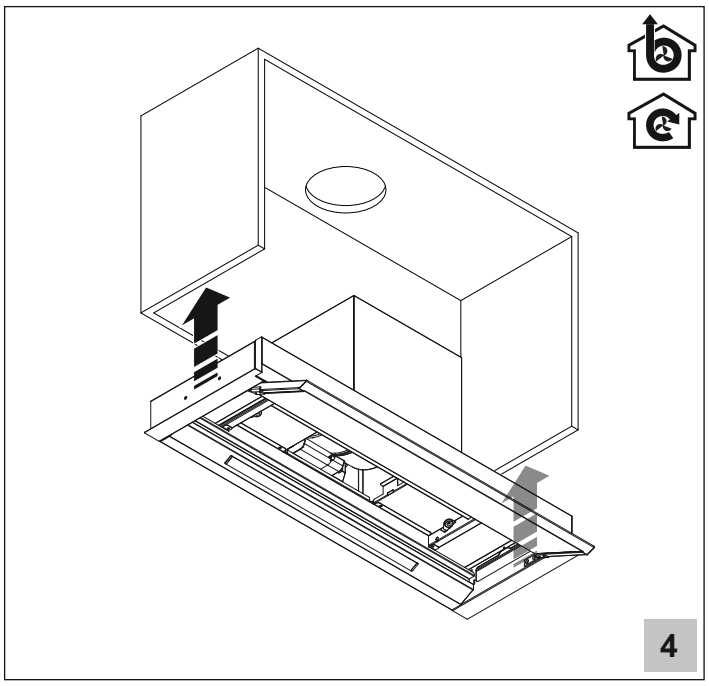
4

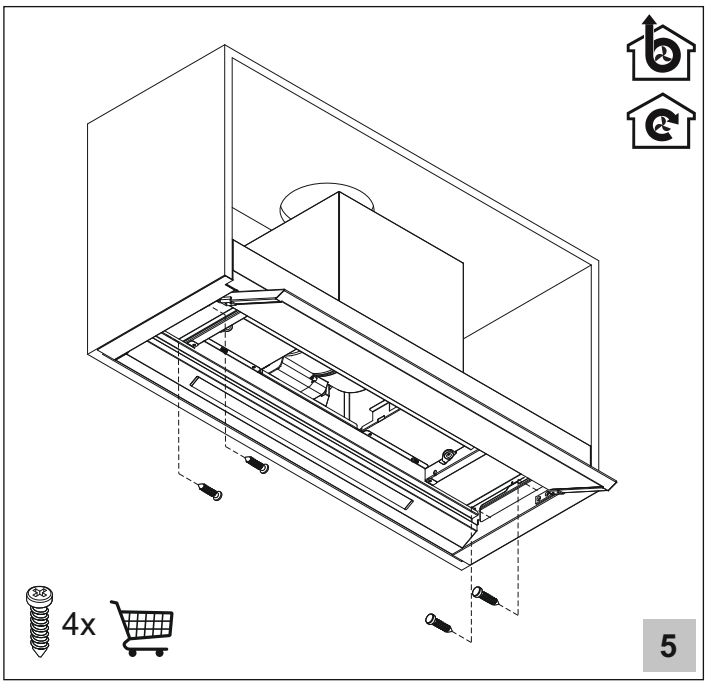
4x
5

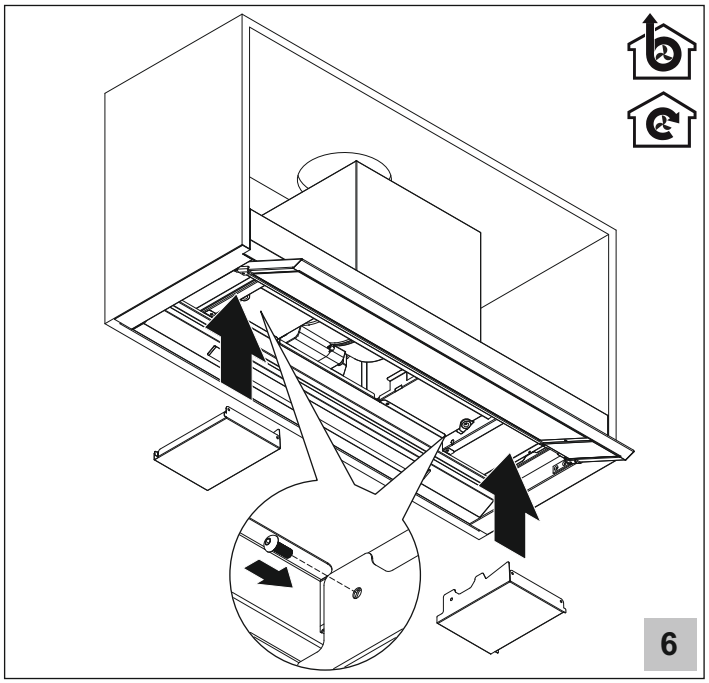
6

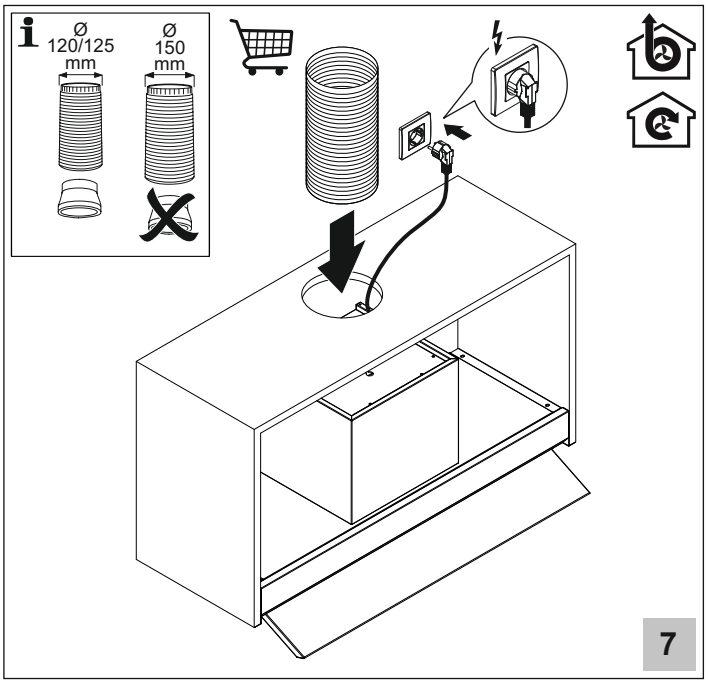
Ø
120/125
mm
Ø
150
mm
7

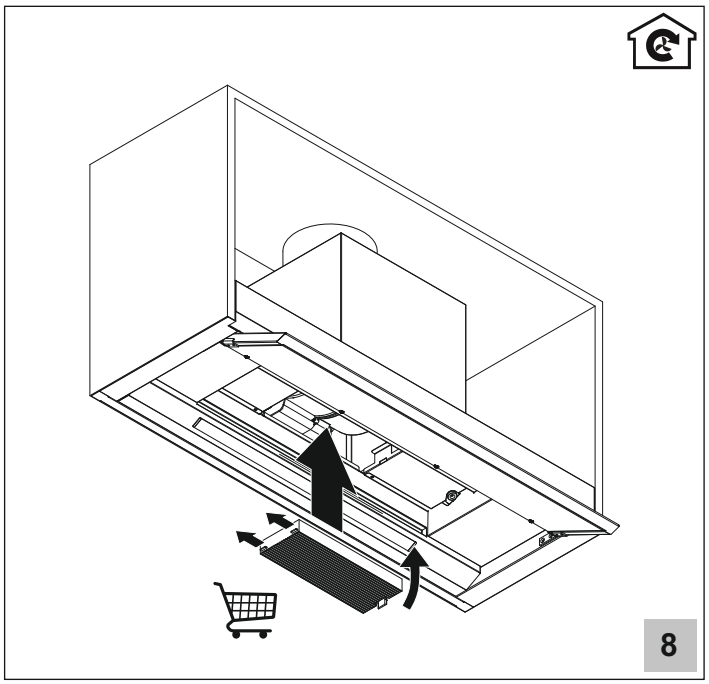
8

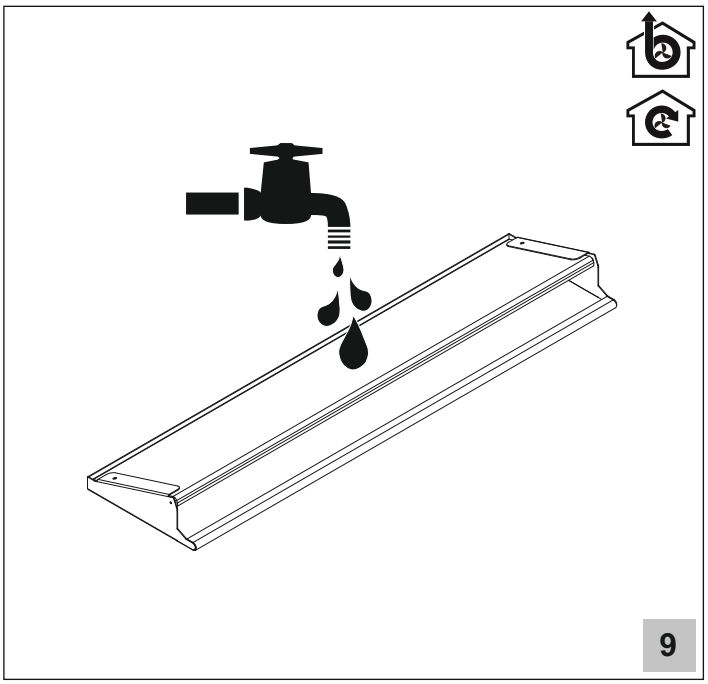
9